PCT Prestige AUTOMOTIVE

ISO9001 FM38198

# FITTING INSTRUCTION

| HY6198 | Hyundai Santa Fe / Kia Sorento (From 2012)<br>Type Approval Number E11 55R01/06*11840*00 |
|---|---|

## COMPONENTS

| ITEM | QTY | DESCRIPTION |
|---|---|---|
| ***A*** | 1 | Crossbar |
| ***B*** | 1 | Detachable Neck Kit – ZCA6023 or ZCG6023 |
| ***C*** | 1 | Side Arm (L/H) |
| ***D*** | 1 | Angle Plate (L/H) |
| ***E*** | 1 | Side Arm (R/H) |
| ***F*** | 1 | Angle Plate (R/H) |
| ***EP*** | 1 | Retractable Electrical Mtg Bracket (ZM1419) |

## BOLT PACK

| ITEM | QTY | DESCRIPTION |
|---|---|---|
| ***H*** | 4 | M12 x 110 Bolts, 2 Nuts & Washers |
| ***I*** | 4 | M12 x 25 Bolts & Washers |
| ***J*** | 6 | M12 x 45 Bolts, 5 Nuts & Washers |
| ***K*** | 4 | M10 x 35 – 1.25 Fine Pitch Bolts & Washers |
| ***L*** | 3 | M10 x 35 Bolts, 1 Nut & Washers |
| ***M*** | 6 | M12 H/D Washers – 30mm O/D |
| ***N*** | 8 | M10 H/D Washers – 30mm O/D |
| ***O*** | 2 | M12 Washers - 23mm O/D |

## FITTING PROCEDURE

⇒ **Lower spare wheel:** remove light clusters, 2 nuts behind covers, 2 fixings each side of lights and fixings vertically into bumper. Disconnect any wiring.

⇒ **Bumper Removal:** Remove 4 fixings in lower edge of bumper, 4/5 fixings in each wheel arch, remove impact beam fixings. Disconnect any wired sensors, remove bumper, and impact beam together.

⇒ Lower exhaust (**Note:** Leave rubbers on chassis hangers).

⇒ Loosely attach side arm ***C*** to the inside of the left hand chassis using bolts ***H*** with washers ***M***. Loosely attach angle plate ***D*** to side arm ***C*** using bolt ***L*** and washers ***N***. Loosely attach angle plate ***D*** to the underside of the chassis using bolts ***K*** and washers ***N***.

⇒ Loosely attach angle plate ***F*** to the inside of the right-hand chassis using bolts ***H*** with washers ***M***. Loosely attach side arm ***E*** to angle plate ***F*** using bolts ***L*** with washers ***N***.

⇒ Loosely attach side arm ***E*** to the underside of the chassis using bolts ***K*** with washers ***N***.

⇒ Loosely attach crossbar **A** to side arms ***D*** & ***E*** using bolts ***J***. Tighten all bolts.

⇒ Re fit exhaust and spare wheel.

⇒ Cut bumper using diagram as a guide.

⇒ Re fit bumper, and lights (keyless entry sensor and any loose wiring will need to be cable tied to crossbar ***A***).

⇒ Attach detachable neck ***B*** & electrical mounting bracket ***EP*** to crossbar ***A*** using bolts ***I*** with washers ***O***. Tighten bolts.

**For 12N or 13 Pin Electrical Socket Fitment:** Mount retractable mounting bracket ***EP*** to the left-hand side of the towbar.

**For 12S Electrical Socket Fitment (Retractable Option):** For 12S Socket Additions where it is desired to retract the electrical mounting bracket, it is necessary to use additional Electrical Mounting Bracket ZM1420 (Purchased Separately). This is mounted to the right of the towbar as illustrated by the ghost image. An additional bumper cut will be required and is illustrated as the dotted shaded area.

**For 12S Electrical Socket Fitment (With Extension Plate Option):** For 12S Socket Additions where it is not desired to retract the electrical mounting bracket, add Extension Plate ZM1364 (Purchased Separately) after bumper re-fitment to Electrical Mounting Bracket (ZM1418). This method prevents retraction of both Electrical Sockets behind the bumper skin, but benefits from a minimised bumper cut.

**NOTE:** Please refer to Operation Manual for Use and Maintenance of the Detachable Neck System.

**TIGHTEN ALL BOLTS**

TORQUE SETTINGS ISO Coarse Pitch M8 = 29Nm, M10 = 58Nm, M12 = 102Nm, M16 = 252Nm
ISO Fine Pitch M8 = 31Nm, M10 = 61Nm, M12 = 111Nm

**THE VEHICLE MANUFACTURER'S SPECIFICATION FOR THE TRAILER WEIGHT AND NOSE LOAD LIMITS MUST BE OBSERVED.**

# FITTING INSTRUCTION

| HY6198 | Hyundai Santa Fe / Kia Sorento (From 2012)<br>Type Approval Number E11 55R01/06*11840*00 |
|---|---|

**FITTING DIAGRAM**

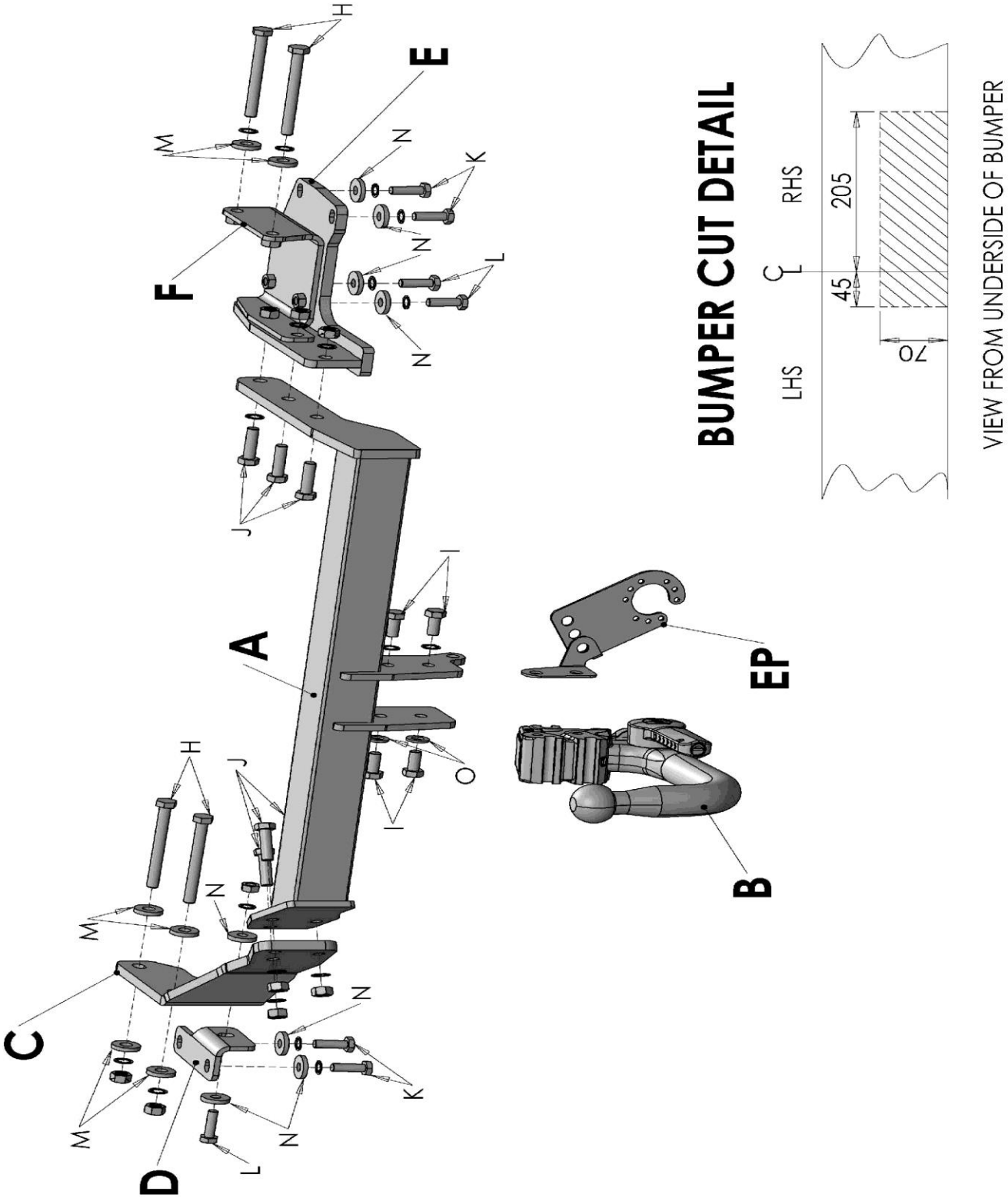


© 2019 Rev 0

# IMPORTANT PRODUCT INFORMATION & GUARANTEE
**(TO BE RETAINED WITH THE VEHICLE AND PASSED TO SUBSEQUENT OWNERS)**

Thank you for purchasing a PCT Automotive product. Please read the following information carefully before fitting or using your PCT Automotive product.

## GUARANTEE

We shall free of charge either repair or at our option replace defective goods where the defects appear

i. if the goods are a towbar manufactured by us, during the economic lifetime of the vehicle it was first fitted to
ii. in the case of all other products manufactured by us, within 3 years following the date of your order

PROVIDED THAT (in each case) such defects shall be found to our reasonable satisfaction to have arisen substantially from our faulty design, workmanship or materials and have not arisen by reason of a failure to follow our instructions (whether written or oral), any modification, misuse, neglect or interference with the installation, any damage or abuse to the goods or vehicle by impact or vandalism or by a failure to carry out reasonable inspection, maintenance and/or adjustment.

At all times, the above guarantee is subject to our standard terms and conditions of sale a copy of which is available upon request from our offices.

### TOWING LIMITS

Our towbars have been designed for towing up to the vehicle manufacturer's maximum recommended trailer weight and nose load limits for your model. Towing with gross weights above that recommended at any time will invalidate the guarantee and cancel any liability for damage. Towing a twin axle trailer, towing over rough ground or using a bicycle/motorcycle carrier, etc, exerts extreme loads on to a towbar and extra care should be taken in these situations not to exceed the vehicle manufacturer's maximum recommended limits.

### PRODUCT IDENTIFICATION MARK

Your product carries a product identification mark. This mark carries important product and batch code information and if the product is type approved it also carries the type approval details which are required by law. Under no circumstances should this mark be defaced, removed or damaged.

## INSTALLATION, INSPECTION, MAINTENANCE AND ADJUSTMENT

### GENERAL INSTALLATION

⇒ All products should only be fitted by competent persons. Electrical products must only be fitted by an experienced auto-electrician.
⇒ Read the product fitting instructions carefully and check all components are included in the fitting kit before commencing installation.
⇒ Check vehicle for corrosion and/or accident damage. Towbars should not be fitted to any vehicle suffering from corrosion or accident damage or which is not in a roadworthy condition.
⇒ Clean off all road dirt, underseal and sound deadening mastic where parts are to fit to ensure correct seating of all components.
⇒ Bumper cut information is given as a guide only. Variations in models may occur therefore the fitter should always check that the bumper cut is necessary and of the correct size and shape before commencing with the cut.
⇒ All drilling swarf should be removed from the vehicle and all holes drilled in the vehicle should be treated with an appropriate rust inhibitor.
⇒ Do not fully tighten bolts before towbar is completely fitted unless instructed to do so in the fitting instruction, this will allow some variances to be overcome before final tightening of bolts.

### PAINT & CORROSION

Towbars manufactured by PCT Automotive undergo a phosphate chemical pre-treatment prior to a polyester powder coat finish being applied. For long lasting good looks and in order to prevent corrosion the towbar should be regularly inspected for paint damage and wherever necessary re-painted in an appropriate finishing paint or underseal. The vehicle should also be regularly checked for any corrosion that could affect the towbar installation. Towbars should not be used on any vehicle suffering from corrosion that could affect the towbar installation.

### BOLTS

All towbar fixing bolts should be checked initially after the first 300 towing miles, or the initial 500 miles of driving uncoupled, and then every 3,000 towing miles or to coincide with the vehicle manufacturer's recommended service intervals, whichever is the sooner. All towbar fixing bolts should be tightened using an appropriate torque wrench to the settings specified in the towbar fitting instruction.

### ELECTRICAL INSTALLATION, TEST/COMMISSIONING AND MAINTENANCE

Failure to comply with the following instructions may cause damage to the towing vehicle's wiring loom and/or towing electrics installation.

Where displacement tap connectors e.g. Scotchloks, are the preferred method of connection, always use the correct colour coded tap connector for the size of cable to which it is to be connected. All towing relays and modules manufactured by PCT Automotive have cabling with a copper cross-sectional area in the range 0.5mm$^2$ to 1mm$^2$.

After installation of the 12N/12S sockets, prior to testing, a water displacement agent e.g. WD40 should be applied into the rear connection void through the water drain hole at the bottom of the sockets and also into the front pins under the socket flap. This socket maintenance should be carried out at least twice a year in the spring and autumn.

The towing electrics test procedure must be undertaken with the engine running. If any of the towing relays fail to function correctly, with the engine running and no other vehicle electrical systems turned on, check that the voltage across the vehicle's battery is between 13V and 14V approx, if this voltage is not correct, check the condition of the vehicle's battery/alternator.

Always ensure that the trailer/caravan/lighting board's own electrical systems are installed and functioning correctly before coupling to the vehicle's 12N/12S sockets.

Every six months (spring and autumn recommended) the battery and alternator of the vehicle should be checked to determine correct electrical functioning. All connections of the electrical installation including the earth should be checked for mechanical soundness and electrical quality. Plugs, sockets, relays and fixings should be checked for water ingress, mechanical soundness, electrical quality and general wear and tear.

*Please complete the following information to validate the guarantee and for future reference.*

VEHICLE OWNER NAME & ADDRESS:

VEHICLE MAKE & MODEL:

VEHICLE REGISTRATION NUMBER:

FITTER NAME & ADDRESS:

DATE TOWBAR FITTED:

If you have any comments or suggestions about the PCT Automotive product fitted to your vehicle, please address them to PCT Automotive, New Street, Holbrook Industrial Estate, Sheffield S20 3GH or email techsupport@pctautomotive.com
Your comments will help us in our aim to continually upgrade our products to meet the high standards expected by our customers.

© PCT Limited (Rev. Nov 2015)